◆MODEL 型 式

PFD-80

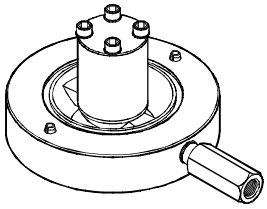

PFD-80F

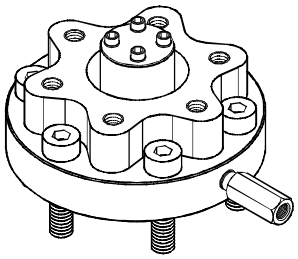

◆SPECIFICATIONS 規 格

Model Number 型式號碼	Maximum Pressure 最大壓力 bar	Connecting PT 適用管徑	Pilot Ration 導壓比例	Maximum Flow 最大流量 lpm	Weight 重量 Kg
PFD-80	250 (3625 psi)	3"	6.2 : 1	400 (105.67 gpm)	2.8 (6.2 lbs)
PFD-80F					8.0 (17.6 lbs)
PFD-90		3-1/2"	8 : 1	630 (166.4 gpm)	3.8 (8.38 lbs)
PFD-90F					11.3 (24.9 lbs)
PFD-100		4"	6.6 : 1	1000 (264.1 gpm)	6.0 (13.2 lbs)
PFD-100F					14.5 (31.96 lbs)
PFD-125		5"	8 : 1	1600 (422.7 gpm)	10.8 (23.8 lbs)
PFD-125F					23.8 (54.47 lbs)
Fluid Type 流體型式			ISO VG 32 , 46 , 68		
Viscosity 黏性 cSt			10~400 (59~1854 SSU)		
Operating Temperature 操作溫度 ℃			-15~70 (-5~158˚F)		
Contamination Level 污染標準			ISO4406. 21/19/16 NAS1638,10		

●**All screws with metric measure , if require inch measure , please contact us.** 所附螺絲皆為公制標準規格品，若需英制螺絲請另外備註說明。

◆HOW TO ORDER 編號說明

1		2		3		4
PFD	—	80		F	—	W

1 VALVE SERIES 系列名稱

PDF=DIRECTIONAL CONTROL VALVES 方向控制閥
(DECOMPRESSION TYPE PRE-FILL VALVE)
(兩段式滿油閥)

2 SUBPLATE MOUNTING SIZE: 稱呼口徑

80 = 3"(76.2mm) 100 = 4"(101.6mm)
90 = 3-1/2"(89mm) 125 = 5" (127mm)

3 FLANGE CONNECTING TYPE 法蘭連接型

F : Flange F：法蘭型
None : Standand 無：標準型

4 TYPE OF FLANGE 法蘭種類

None : No Flange 無：不帶法蘭
P : P Port Flange P：帶P口法蘭
T : T Port Flange T：帶T口法蘭
W : P & T Port Flange W：帶P及T口法蘭
※ Only F Type With Flange 註：法蘭只有F型才生產

◆ FLANGE DIMENSIONS 法蘭尺寸圖

See Page F_300.301 (same as PF- ✱)
見 F_300.301(與PF- ✱ 相同)

◆ DIMENSIONS 外型尺寸圖

See Page F_302.303 (same as PF- ✱)
見 F_302.303(與PF- ✱ 相同)

※ If you have any questions. Please contact us.
若有任何問題請與本公司聯繫.

◆ SECTION 剖面圖

※ Number 4. For F Type only
只有F型有件號4

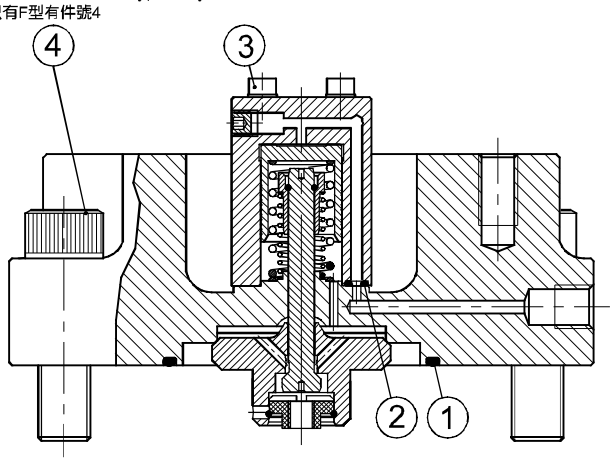

◆ ACCESSORIES 附屬配件

PFD-80(F)			
NO	Description	Q'ty	Specification
1	O-ring	1	G80
2	O-ring	1	P4
3	HEX. COUNTER-SINK SCREW	6	M5 x 65L
4	HEX. COUNTER-SINK SCREW	6	M16 x55L

PFD-100(F)			
NO	Description	Q'ty	Specification
1	O-ring	1	G115
2	O-ring	1	P5
3	HEX. COUNTER-SINK SCREW	8	M5 x 75L
4	HEX. COUNTER-SINK SCREW	6	M20 x70L

PFD-90(F)			
NO	Description	Q'ty	Specification
1	O-ring	1	G100
2	O-ring	1	P5
3	HEX. COUNTER-SINK SCREW	6	M5 x 70L
4	HEX. COUNTER-SINK SCREW	6	M18 x65L

PFD-125(F)			
NO	Description	Q'ty	Specification
1	O-ring	1	G140
2	O-ring	1	P6
3	HEX. COUNTER-SINK SCREW	8	M6 x 90L
4	HEX. COUNTER-SINK SCREW	12	M20 x80L

◆ CONTROL PORT(S)

動作形式

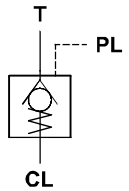

F
PFD